SA08340/SA08340A/SA08340B/SA08340M/SA08340S
Towel Ring

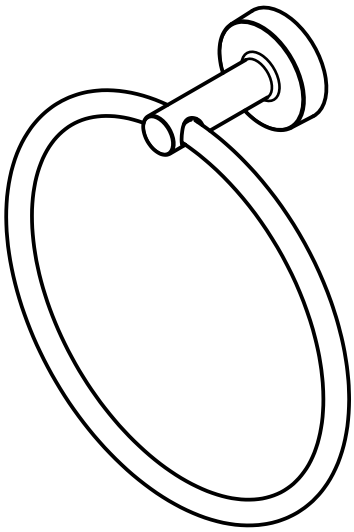

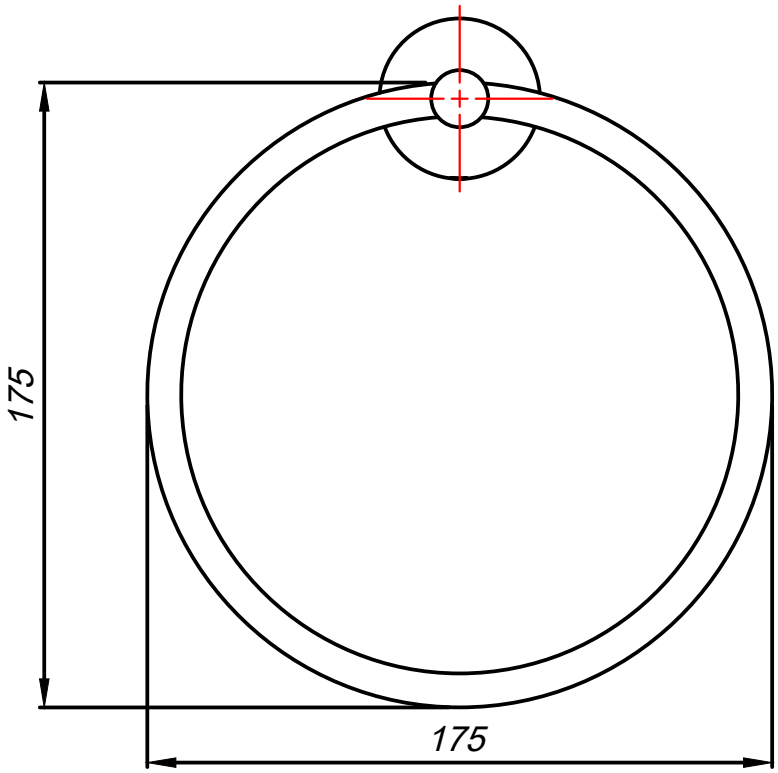

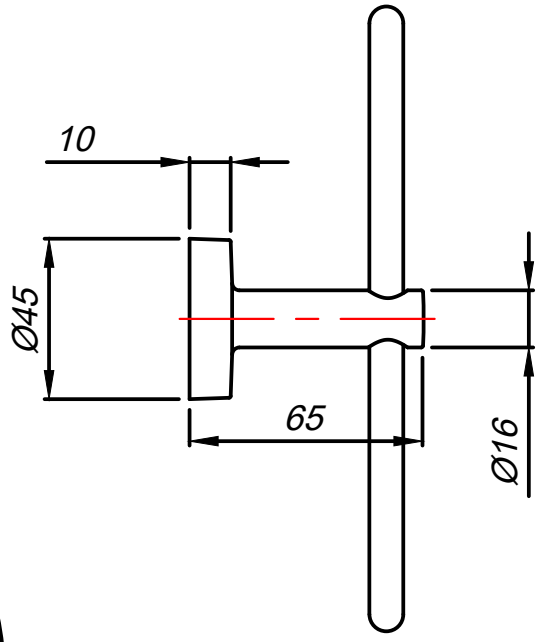

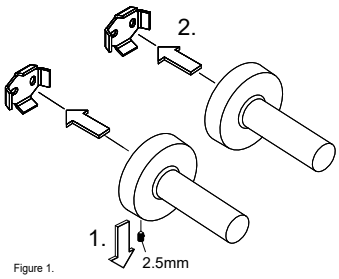

Figure 1.

1. Loosen the set screw on the accessory and remove the backing plate.
2. Position the accessory against the wall, ensure that the accessory is level and mark outline with pencil.

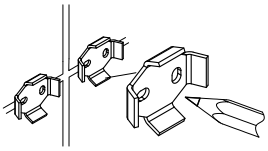

Figure 2.
Position the backing plate flat side down on the wall and mark holes with pencil

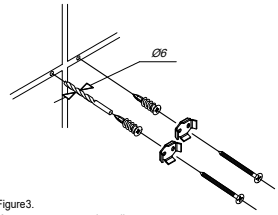

Figure3.
Mount to concrete or drywall:
Pre-drill holes on the wall to fit wall anchors.
(6mm drill bit recommended).
Insert wall anchors into the wall.
Position backing plate flat side down over the anchors and install screws.
Mount to wood:
If installing on wood surface, use wood screws.
(NO anchors required).

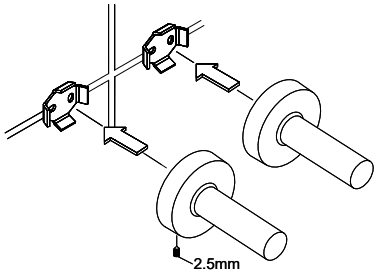

Figure 4.
Slide the accessory onto the backing plate and tighten the set screw the using 2.5mm allen key provided .